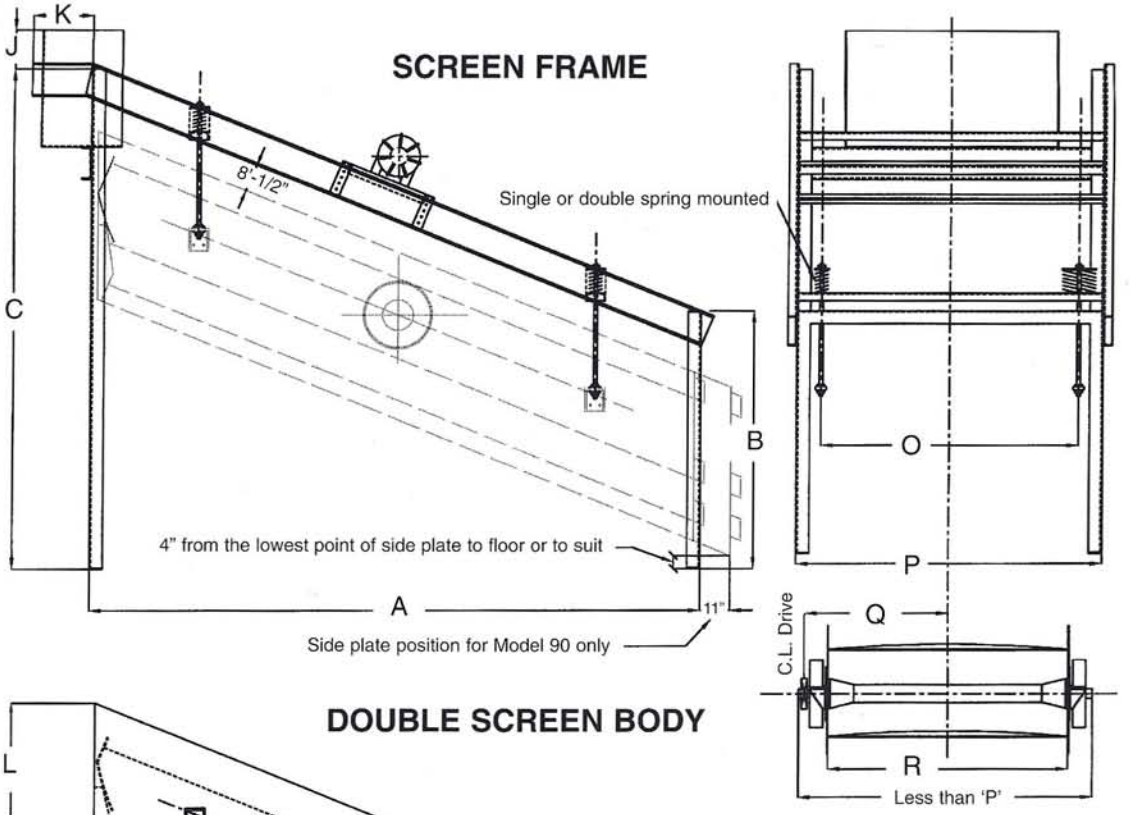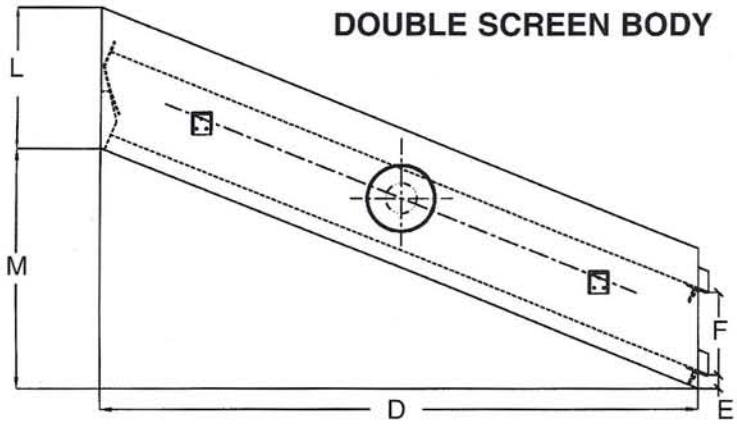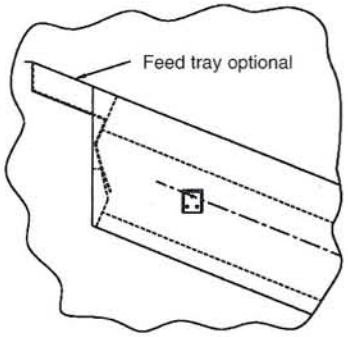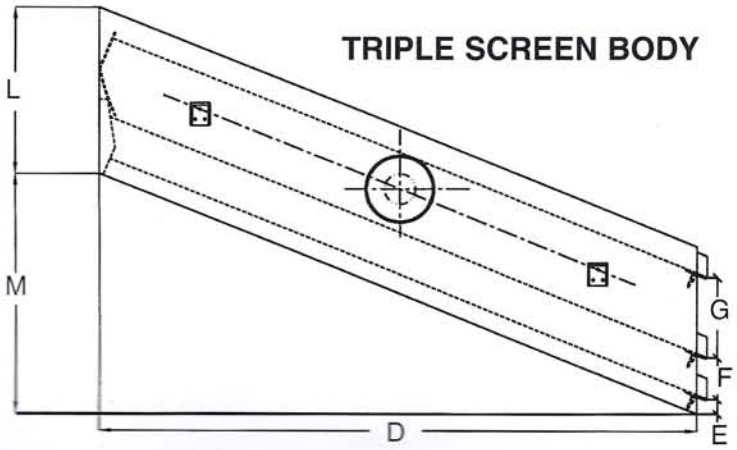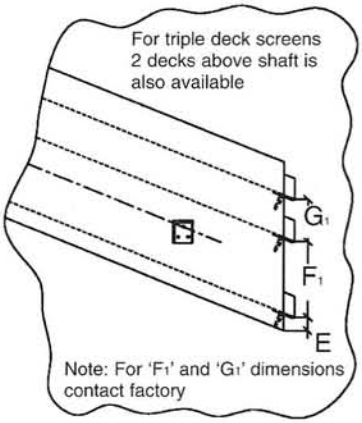DIMENSION DRAWINGS